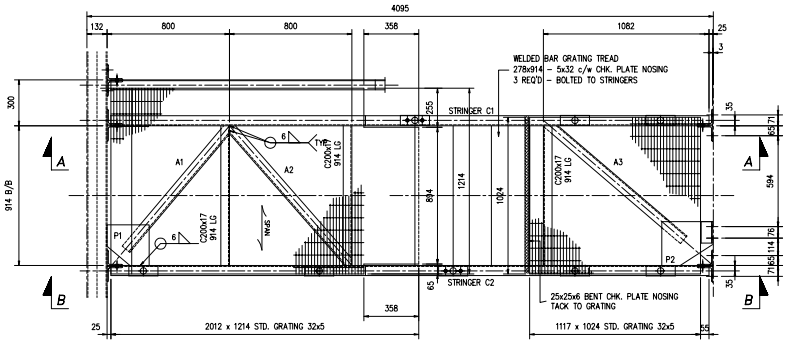

622-A – 1 REQ'D
STAIR ASSEMBLY

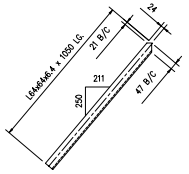

A1 – 1 REQ'D
L64x64x6.4
N.T.S.

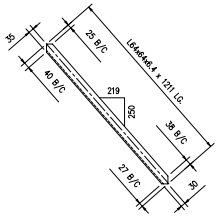

A2 – 1 REQ'D
L64x64x6.4
N.T.S.

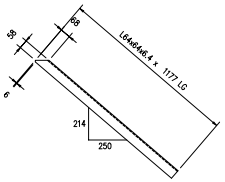

A3 – 1 REQ'D
L64x64x6.4
N.T.S.

A4 – 2 REQ'D
L64x64x6.4
N.T.S.

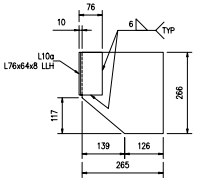

P1 – 1 REQ'D
10 PLATE
N.T.S.

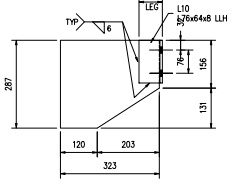

P2 – 1 REQ'D
10 PLATE
N.T.S.

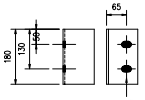

2– 13/16"ø x 1 1/4" LG
SLOTTED HOLES
L2e – 4 REQ'D
L102x102x10
N.T.S.

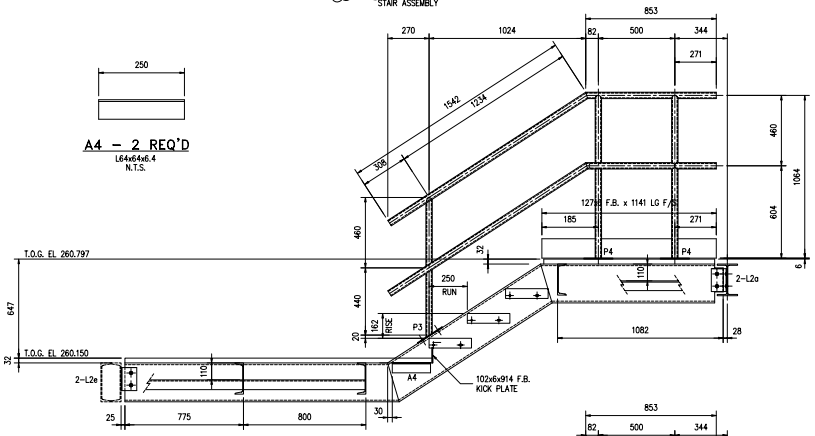

SECTION A–A

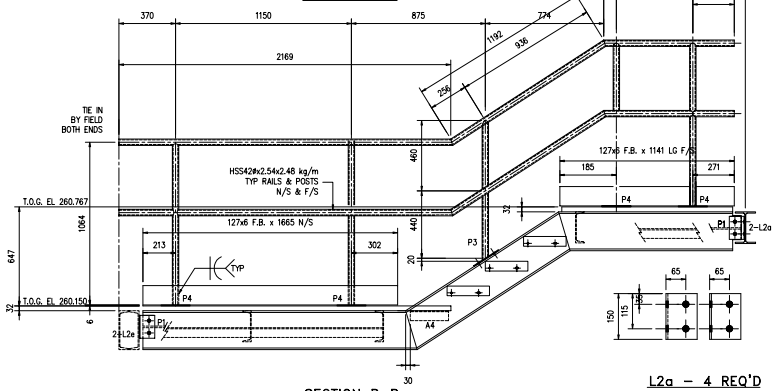

SECTION B–B

L2a – 4 REQ'D
L102x102x10
N.T.S.

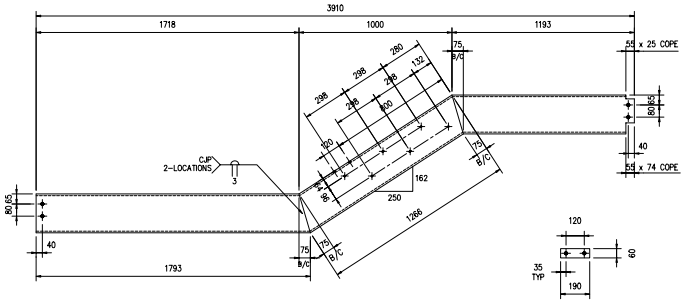

C1 – 1 REQ'D
C250x23

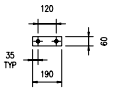

P3 – 2 REQ'D AS SHOWN
P4 – 6 REQ'D NO HOLES
6 PLATE

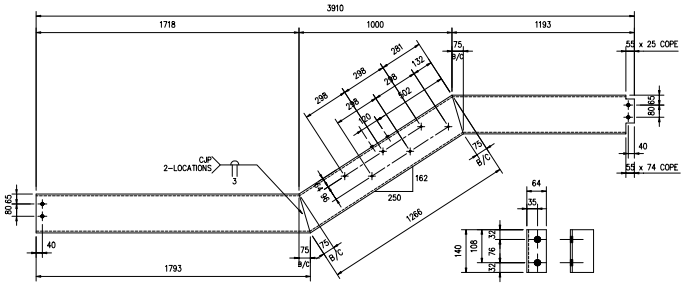

C2 – 1 REQ'D
C250x23 C250x23

L10 – 1 REQ'D AS SHOWN
L10a – 1 REQ'D NO HOLES
L76x64x8
N.T.S.

BILL OF MATERIALS

MARK NO.	DESCRIPTION	DIMENSIONS	MATERIAL	WEIGHT Kgs ea	QTY
622–A	STAIR ASSEMBLY	–	–	668	1
C1 & C2	C250x23	1793	300W	43	2
	C250x23	1266	300W	62	2
	C250x23	1193	300W	11	2
	C200x17	914	300W	16	3
A1	L64x64x6.4	1050	300W	7	1
A2	L64x64x6.4	1211	300W	8	1
A3	L64x64x6.4	1177	300W	7	1
A4	L64x64x6.4	250	300W	8	2
P1	10 PLATE	265x266	300W	6	1
P2	10 PLATE	287x323	300W	6	1
P3	6 PLATE	190x60	300W	1	4
P4	6 PLATE	190x60	300W	1	4
L2a	L102x102x10	150	300W	2	4
L2e	L102x102x10	150	300W	2	4
L10	L76x64x8	140	300W	1	1
L10a	L76x64x8	140	300W	1	1
	HSS#42x2.54x2.48	~25000 LOT	350W	60	1
	127x6 F.B. KICKPLATE	2096	300W	13	2
	32x5 WELDED BAR GRATING	1722x1016	W19–4	76	1
	25x25x6 BENT CH. PLATE	1016	300W	2	1
	178x914 WELDED BAR GRAT. TREAD	5x32	W19–4	~20	9

NOTE:

1 – BOLTS TO BE 3/4" DIA ASTM A325 U.N.O.
2 – QUANTITIES SHOWN APPLY TO THIS DRAWING ONLY
3 – FOR GENERAL NOTES REFER TO AMEC DWG 0243–54–297
4 – ALL ROLLED SECTIONS AND PLATES TO BE GRADE 300W
5 – ALL HSS SECTIONS TO BE GRADE 350W CLASS C
6 – ALL WELDING ELECTRODES TO BE E70XX (E480XX)
7 – PAINT AS PER SPECIFICATIONS.

ALL HOLES 13/16"ø U.N.O.

* HSS WEEP HOLES SHALL BE NO HIGHER THAN 20mm FROM LOWEST POINT.

REV #	DATE	DESCRIPTION
A		
B		
C		
D	27/04/01	DWG. NO. AMENDED
E	26/04/01	ISSUED FOR FABRICATION

REFERENCES

DWG #	DESCRIPTION
0243–54–312	BELT FILTER – REINFORCED CONCRETE @ 25B.500

TOLERANCE
0 = ± 1.5 mm
0.0 = ± 0.75 mm
SQUARENESS: 0.125mm / mm
ANGULARITY: ± 30 MINUTES
REMOVE ALL SHARP CORNERS AND DE–BURR.

THIRD ANGLE PROJECTION
ALL DIMENSIONS IN METRIC UNITS

CHECKED BY	JC.	2001/04/26
DRAWN BY	MB	2001/04/25

MACHINE & STEEL FABRICATION INC.
259 PRESTON LANE – P.O. BOX 1580
TIMMINS, ONTARIO P4N 7W7
TEL (705) 267–1445 FAX (705) 267–1525

Agrium KAPUSKASING, ONTARIO
KAPUSKASING PHOSPHATE OPERATION
DEWATERING & DRYING
BELT FILTER
STRUCTURAL STEEL
STAIR DETAILS

SCALE 1:15 U.N.O.
PROJECT No. T–070
DRAWING NUMBER 54–315–622
REVISION 1